U-FNO - an enhanced Fourier neural operator based-deep learning model for multiphase flow

Gege Wen[1], Zongyi Li[2], Kamyar Azizzadenesheli[3], Anima Anandkumar[2], Sally M. Benson[1]

[1]Stanford University, [2]California Institute of Technology, [3]Purdue University

Numerical simulation of the **multiphase flow processes** are used throughout project planning, monitoring, optimization…

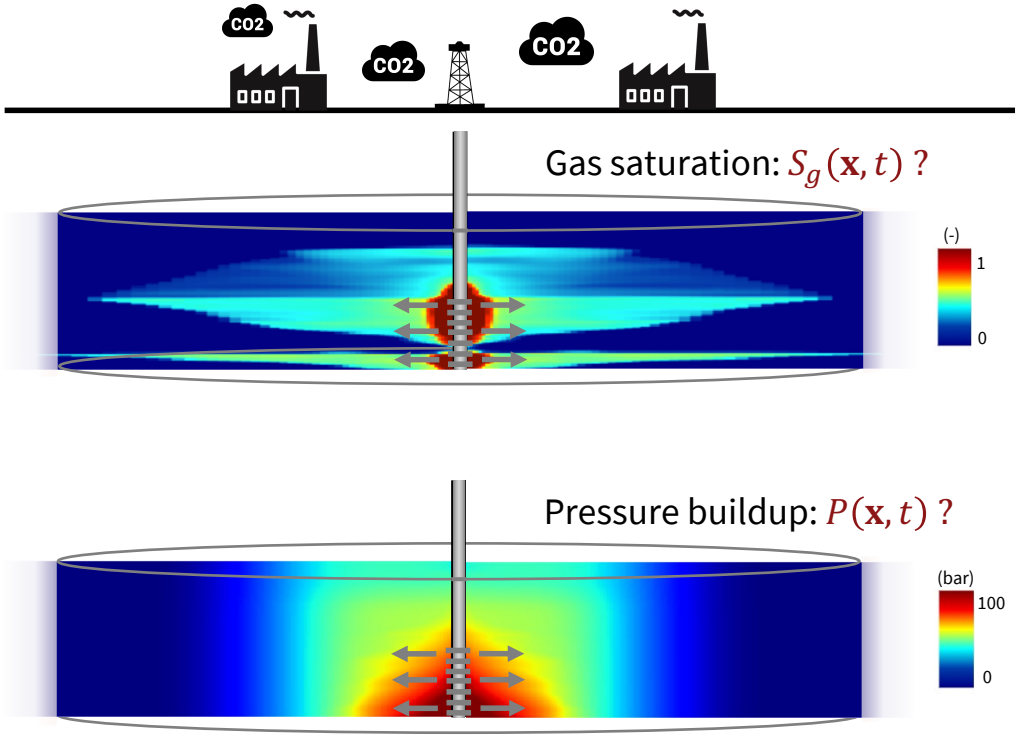

Challenges

- Highly nonlinear governing PDEs
- Multi-physics in the problems
- Multiscale heterogeneity
- Need for high grid resolution
- Inherent uncertainty in geology

Summary to ML approaches available for CO_2-water multiphase flow problem

Approach	Example	Method	Advantage	Problem
Neural-FEM	Physics-informed neural networks (Raissi et al, 2019; Fuks et al, 2020)	Formulate PDE/initial cond. in loss function	PDE-based	Expensive, convergence

Summary to ML approaches available for CO_2-water multiphase flow problem

Approach	Example	Method	Advantage	Problem
Neural-FEM	Physics-informed neural networks (Raissi et al, 2019; Fuks et al, 2020)	Formulate PDE/initial cond. in loss function	PDE-based	Expensive, convergence
Data-driven CNN	CCSNet (Wen et al, 2021)	Learn empirical input-output mapping	Very fast prediction	Lots of data

Summary to ML approaches available for CO_2-water multiphase flow problem

Approach	Example	Method	Advantage	Problem
Neural-FEM	Physics-informed neural networks (Raissi et al, 2019; Fuks et al, 2020)	Formulate PDE/initial cond. in loss function	PDE-based	Expensive, convergence
Data-driven CNN	CCSNet (Wen et al, 2021)	Learn empirical input-output mapping	Very fast prediction	Lots of data
Neural operator	**FNO (Li et al, 2021)**	**Learn infinite-dimensional integral operator with NN**	**Very fast prediction, data efficient**	**To be investigated**

Summary to ML approaches available for CO_2-water multiphase flow problem

Approach	Example	Method	Advantage	Problem
Neural-FEM	Physics-informed neural networks (Raissi et al, 2019; Fuks et al, 2020)	Formulate PDE/initial cond. in loss function	PDE-based	Expensive, convergence
Data-driven CNN	CCSNet (Wen et al, 2021)	Learn empirical input-output mapping		
Neural operator	**FNO (Li et al, 2021)**	**Learn infinite-dimensional integral operator with NN**	**Very fast prediction, data efficient**	**To be investigated**

U-FNO: an enhanced FNO

Let's take a closer look at the model architecture of original Fourier Neural Operator (Li et al, 2021)

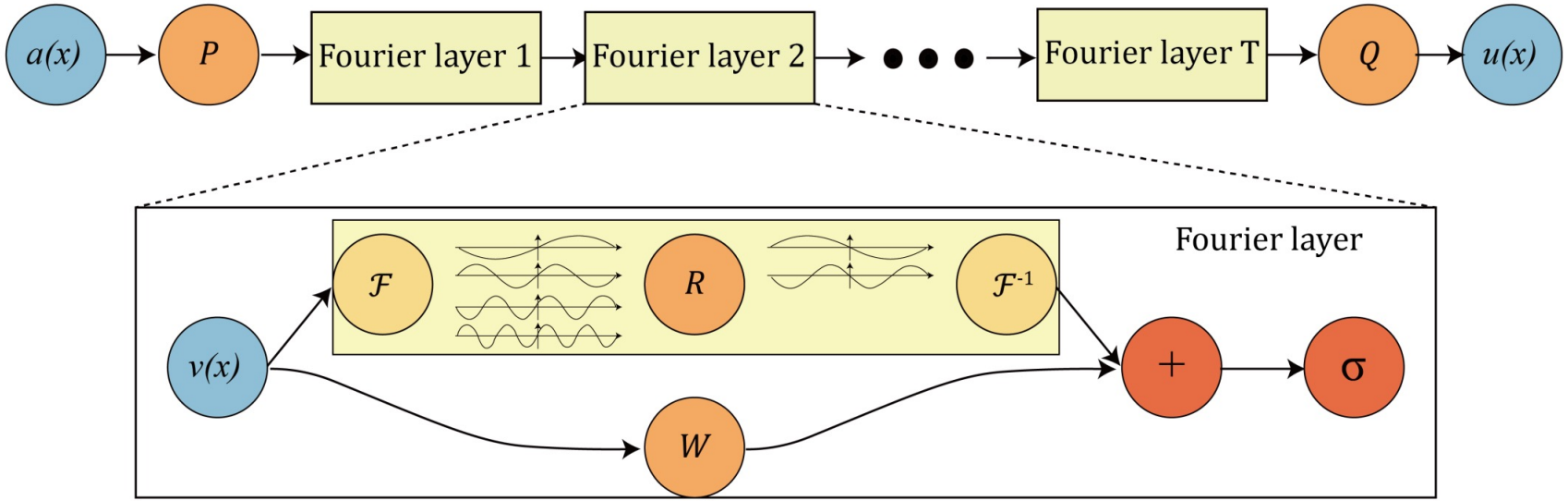

Closer look at the model architecture of Fourier Neural Operator (Li et al, 2021)

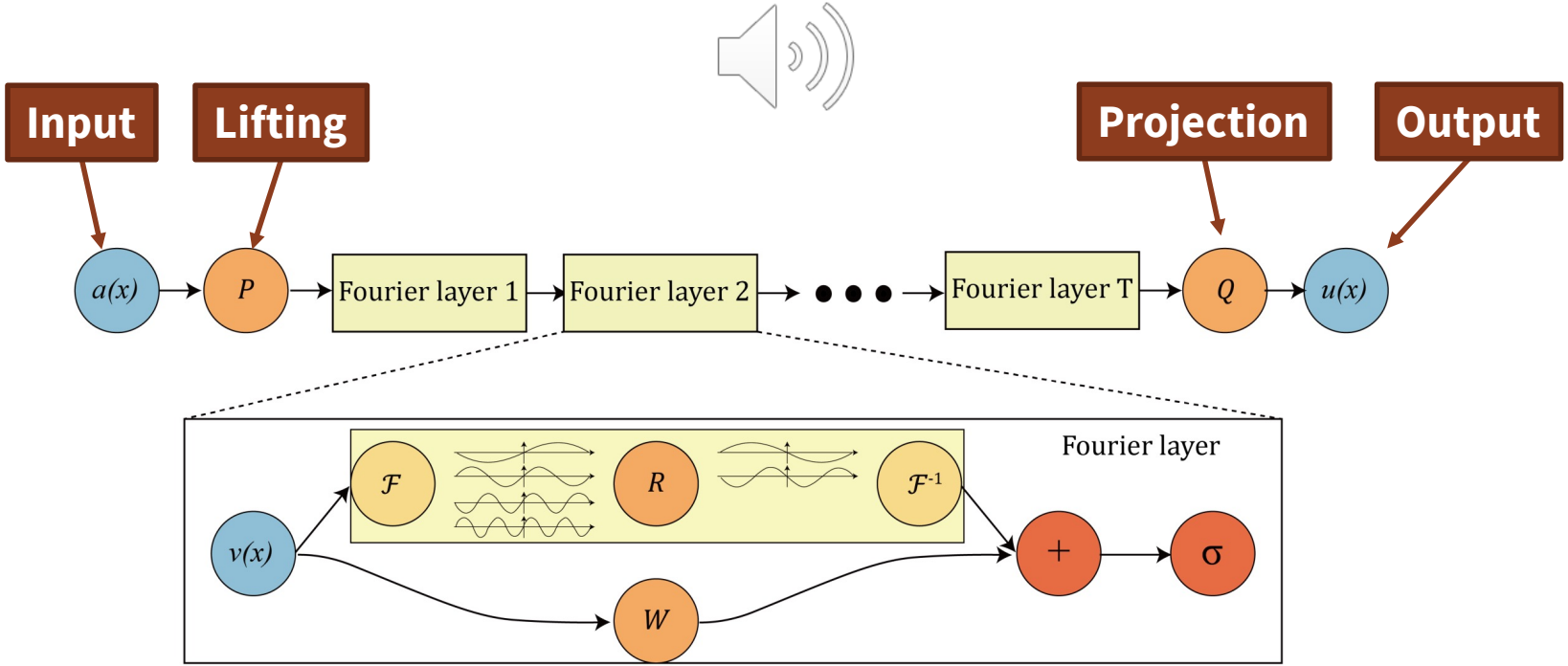

Closer look at the model architecture of Fourier Neural Operator (Li et al, 2021)

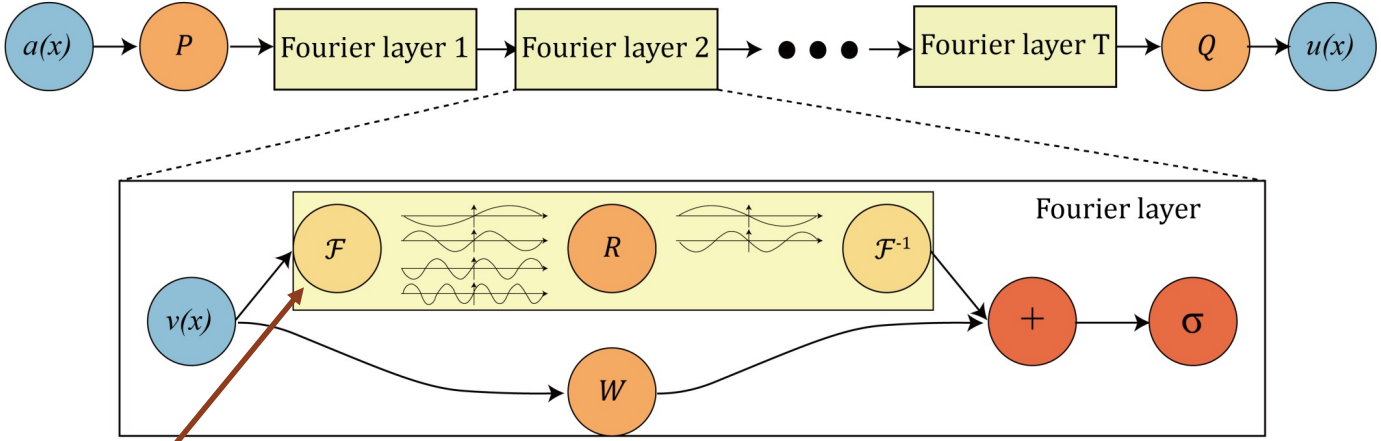

$$(\mathcal{F}f)_j(k) = \int_D f_j(x) e^{-2i\pi\langle x,k\rangle} \mathrm{d}x$$

The transform is conducted utilizing Fast Fourier Transform (FFT).

After the transform, the discrete pixel data becomes **continuous function**.

Closer look at the model architecture of Fourier Neural Operator (Li et al, 2021)

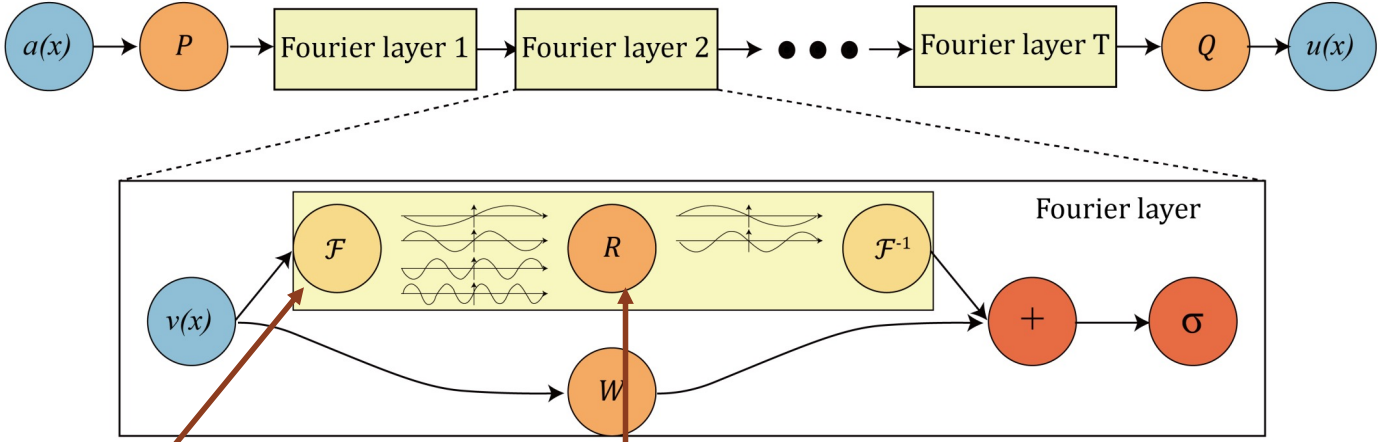

$$\boxed{(\mathcal{K}(\phi)v_t)(x) = \mathcal{F}^{-1}\Big(R_\phi \cdot (\mathcal{F}v_t)\Big)(x)}$$

$$\boxed{(\mathcal{F}f)_j(k) = \int_D f_j(x)e^{-2i\pi\langle x,k\rangle}\mathrm{d}x}$$

Closer look at the model architecture of Fourier Neural Operator (Li et al, 2021)

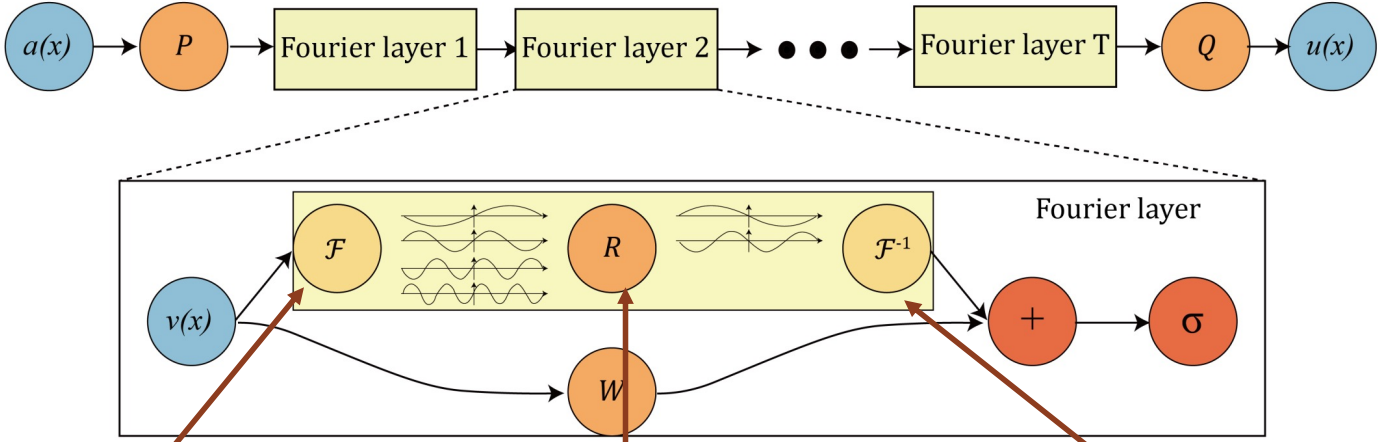

$$(\mathcal{K}(\phi)v_t)(x) = \mathcal{F}^{-1}\Big(R_\phi \cdot (\mathcal{F}v_t)\Big)(x)$$

$$(\mathcal{F}f)_j(k) = \int_D f_j(x)e^{-2i\pi\langle x,k\rangle}\mathrm{d}x$$

$$(\mathcal{F}^{-1}f)_j(x) = \int_D f_j(k)e^{2i\pi\langle x,k\rangle}\mathrm{d}k$$

U-FNO instead of FNO to enhance the predictability of higher frequencies information

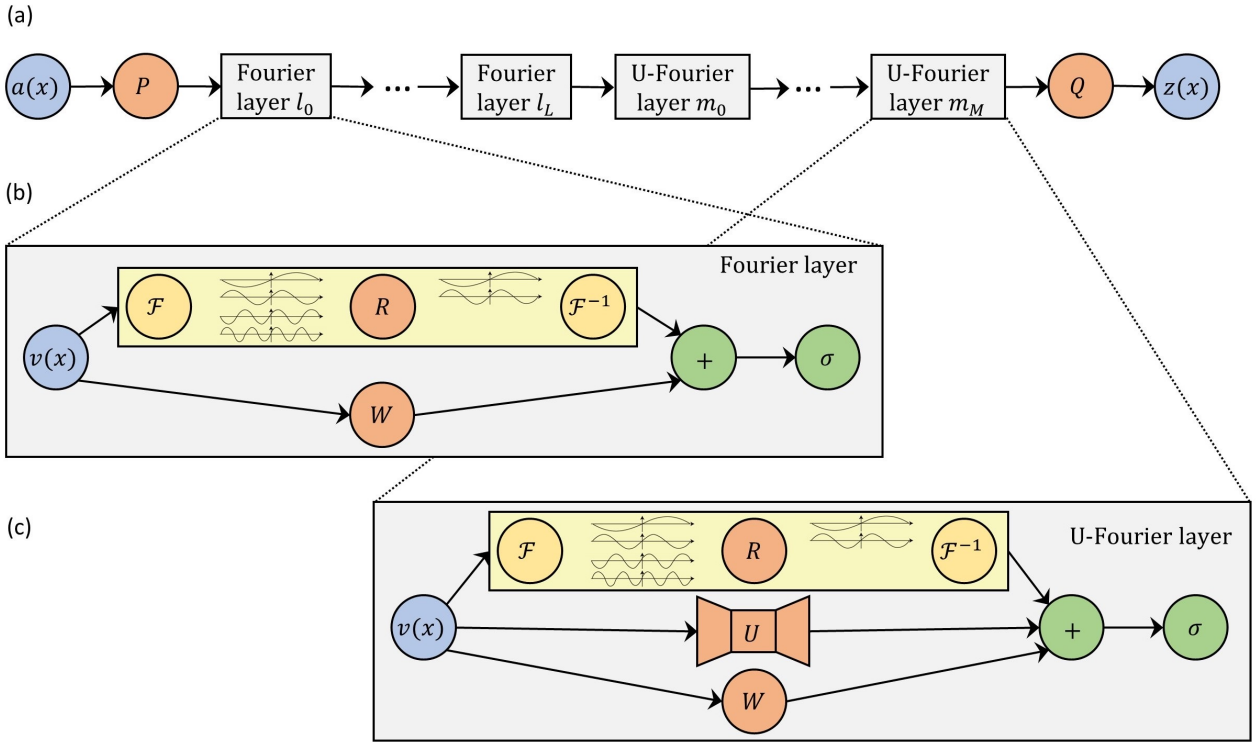

U-FNO instead of FNO to enhance the predictability of higher frequencies information

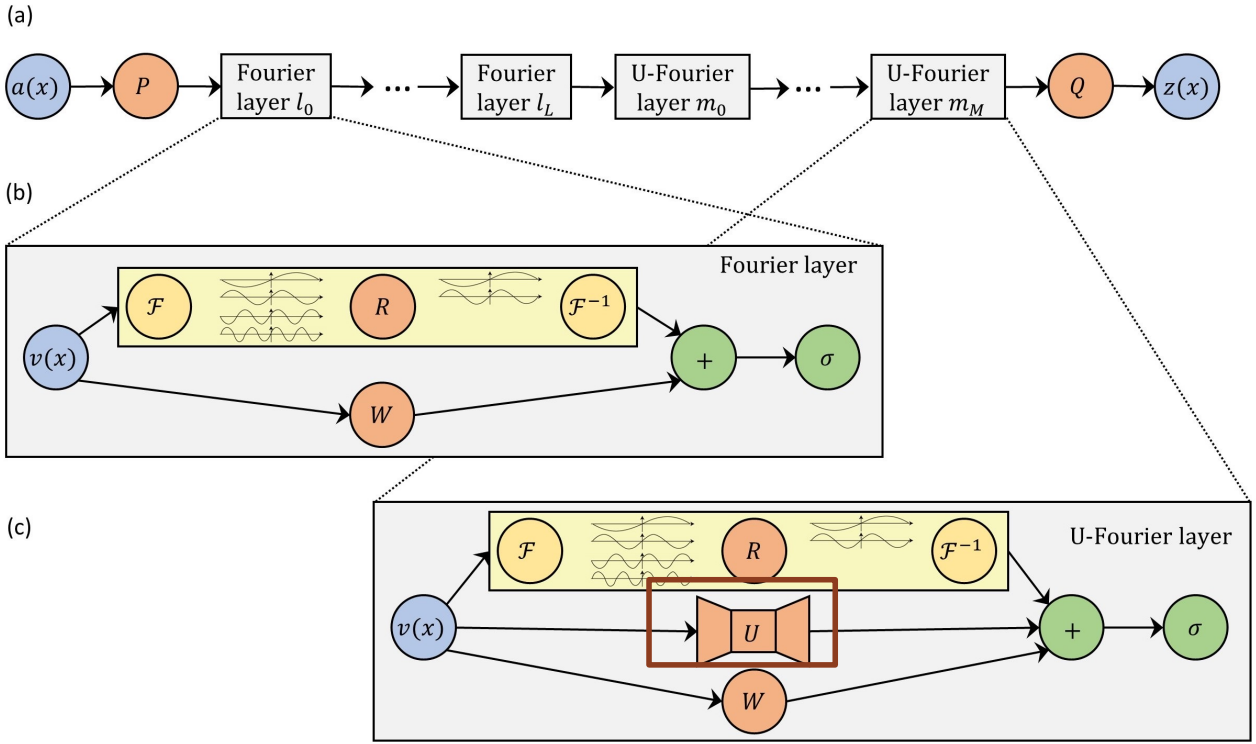

Note 1:
CNN U-Net to enhance higher frequencies information

U-FNO instead of FNO to enhance the predictability of higher frequencies information

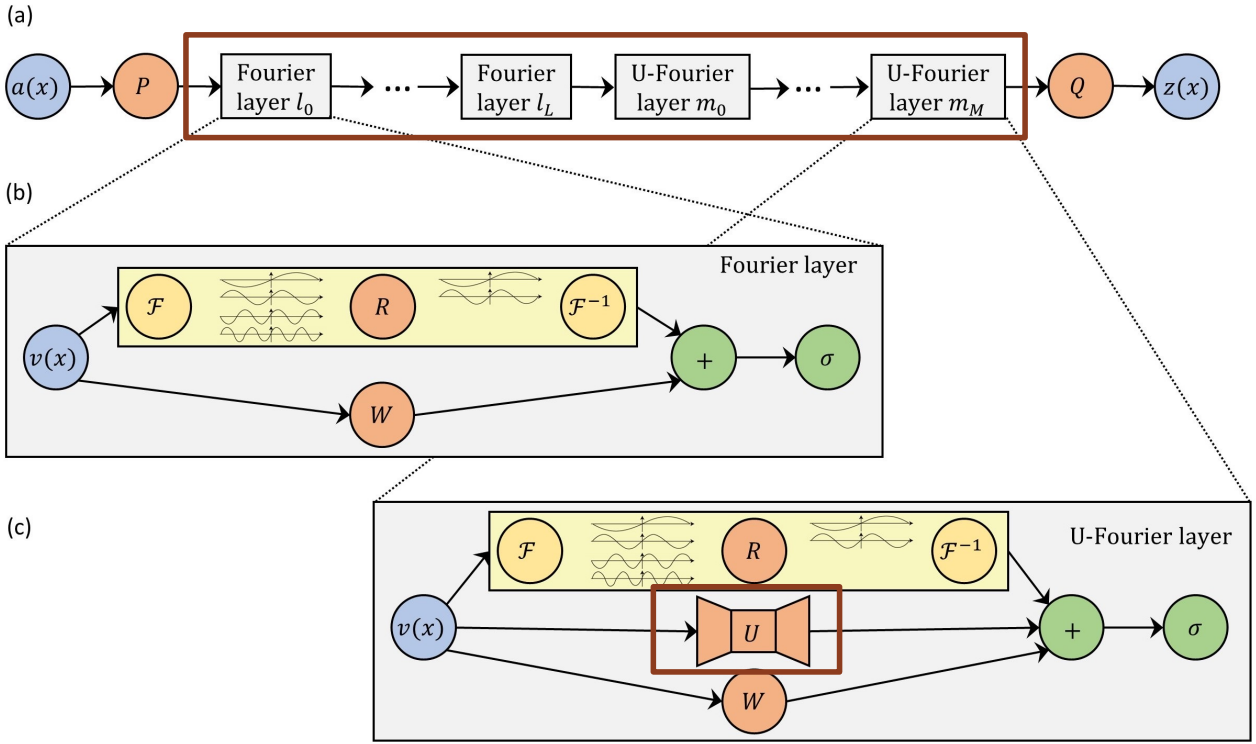

Note 2:
Fourier and U-Fourier layer split is a hyper-parameter that can be tuned for specific problem

Note 1:
CNN U-Net to enhance higher frequencies information

Training general-purposed numerical simulator alternative with data set contains 4,500 input/output mappings

Input: parameters covering nearly all realistic scenarios for CO_2 storage in saline aquifers

- Pressure: 100-300 bar
- Temperature: 35-170 C
- Formation thickness: 15-200m
- Rel perm (S_{wi}): 0.1-0.3
- Capillary pressure (λ): 0.3-0.7
- Injection rate: 0.2-2 Mt/yr
- Perforation interval: 10-200m
- Permeability map
- Anisotropy map
- Porosity map

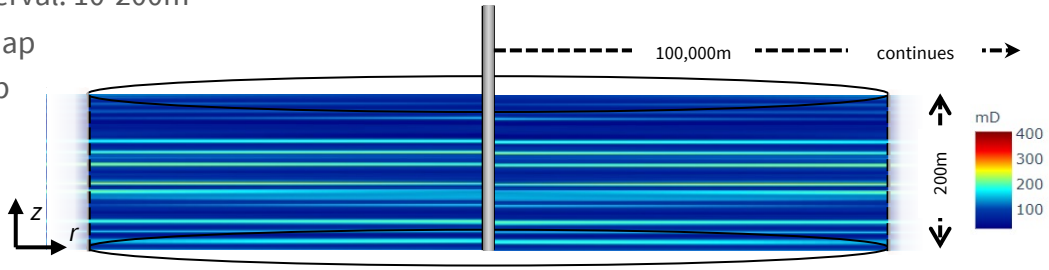

Training general-purposed numerical simulator alternative with data set contains 4,500 input/output mappings

Input: parameters covering nearly all realistic scenarios for CO_2 storage in saline aquifers

- Pressure: 100-300 bar
- Temperature: 35-170 C
- Formation thickness: 15-200m
- Rel perm (S_{wi}): 0.1-0.3
- Capillary pressure (λ): 0.3-0.7
- Injection rate: 0.2-2 Mt/yr
- Perforation interval: 10-200m
- Permeability map
- Anisotropy map
- Porosity map

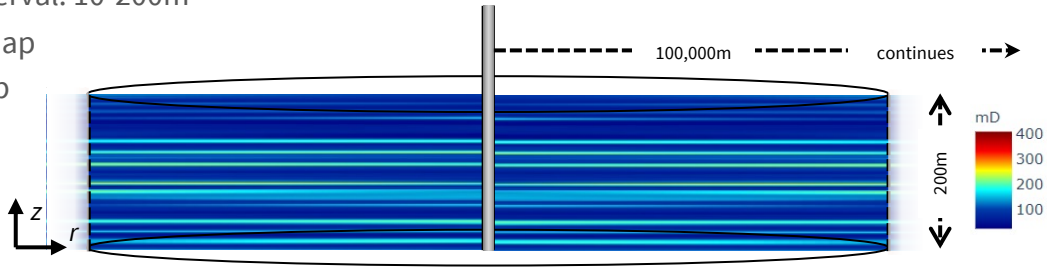

Output: gas saturation and pressure buildup in *temporal-3d volumes*

Gas saturation: $S_g(\mathbf{x}, t)$

Pressure buildup: $P(\mathbf{x}, t)$

Training general-purposed numerical simulator alternative with data set contains 4,500 input/output mappings

Input: parameters covering nearly all realistic scenarios for CO_2 storage in saline aquifers

- Pressure: 100-300 bar
- Temperature: 35-170 C
- Formation thickness: 15-200m
- Rel perm (S_{wi}): 0.1-0.3
- Capillary pressure (λ): 0.3-0.7
- Injection rate: 0.2-2 Mt/yr
- Perforation interval: 10-200m
- Permeability map
- Anisotropy map
- Porosity map

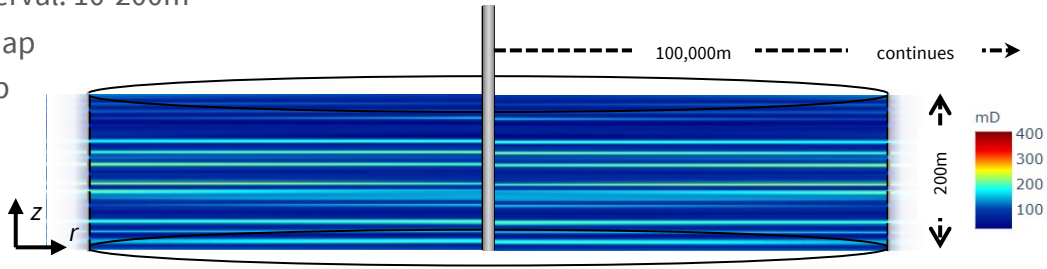

Output: gas saturation and pressure buildup in *temporal-3d volumes*

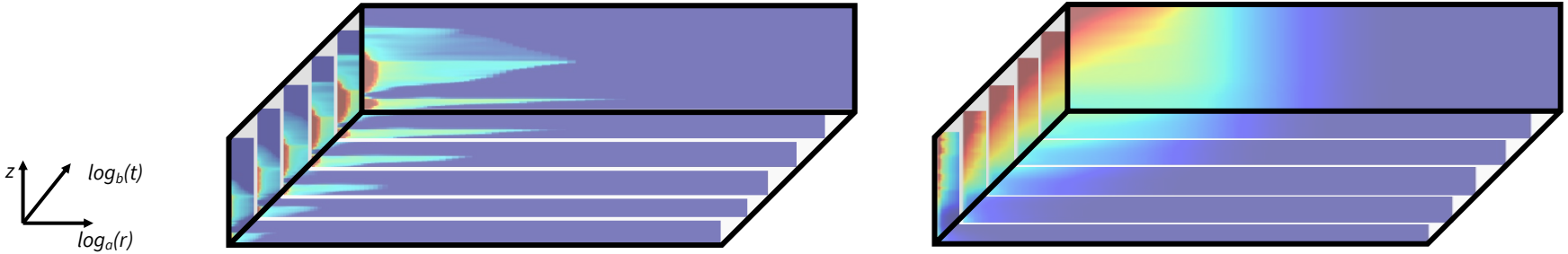

Gas saturation: $S_g(\mathbf{x}, t)$

Pressure buildup: $P(\mathbf{x}, t)$

Result: CO_2 gas saturation plume prediction greatly improved with U-FNO comparing to CNN

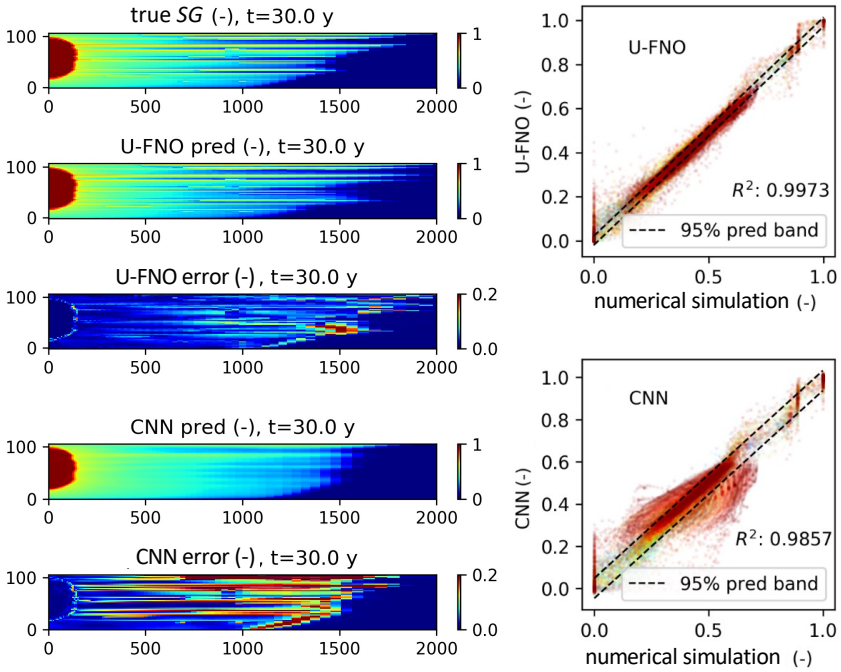

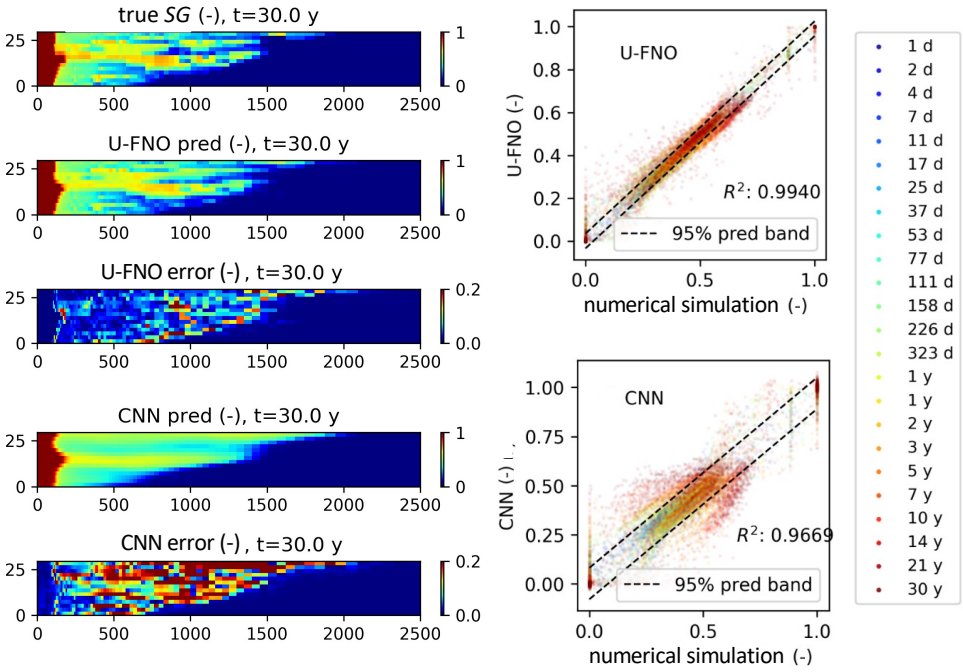

Result: Pressure buildup prediction greatly improved with U-FNO comparing to CNN

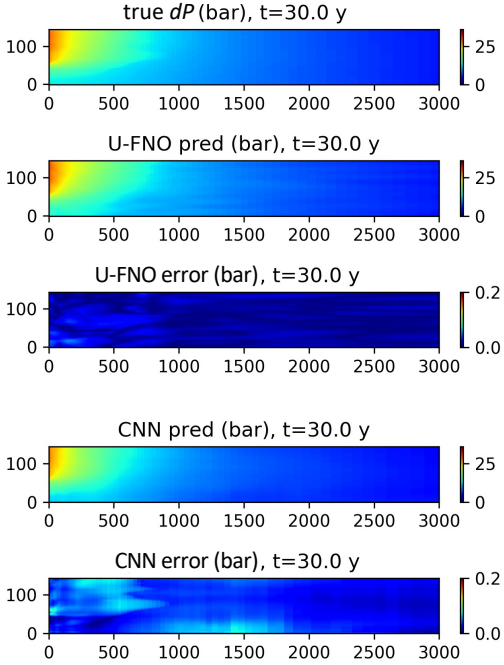

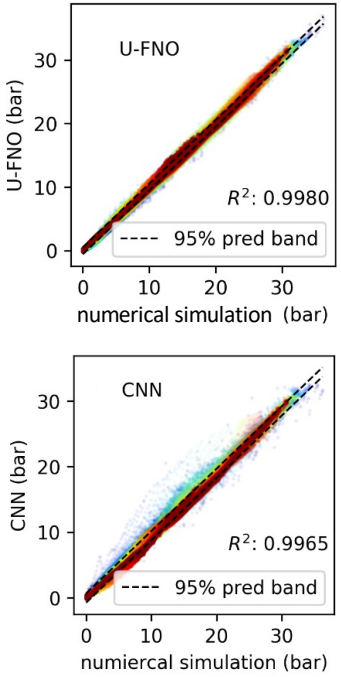

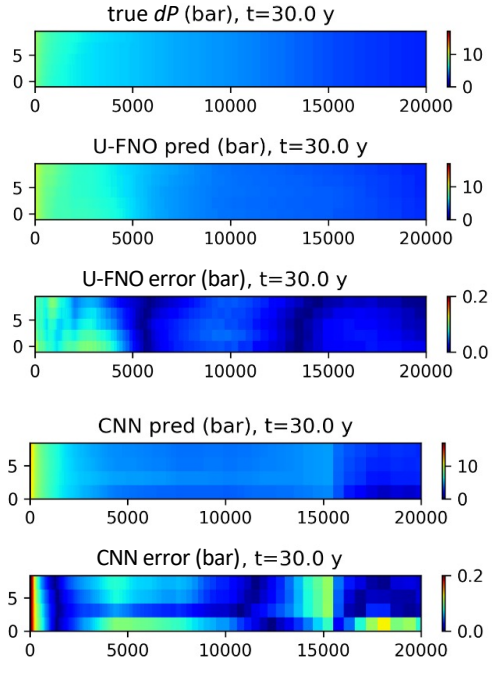

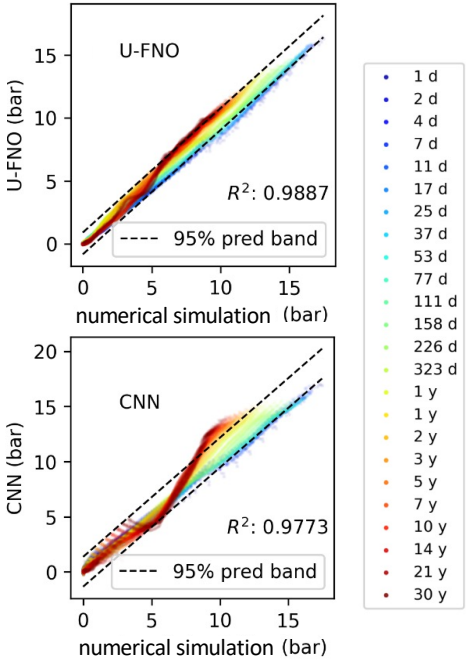

Result: U-FNO is 46% more accurate in gas saturation, and 24% more accurate in pressure buildup

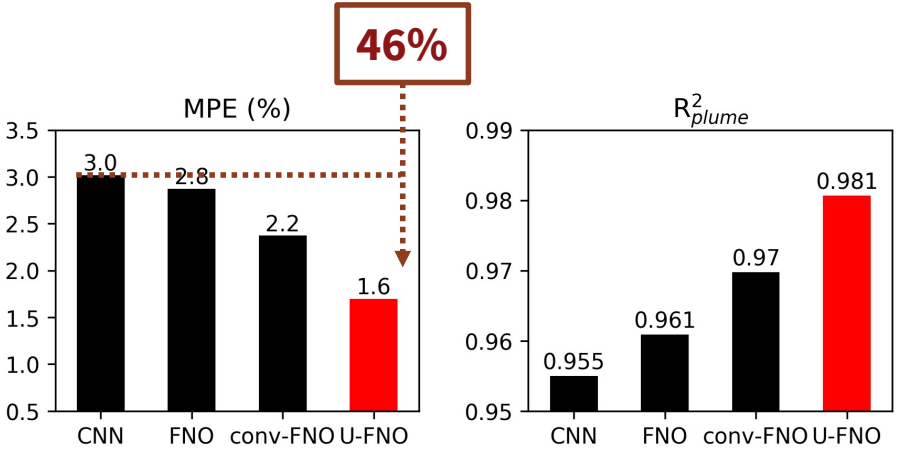

A. Gas saturation

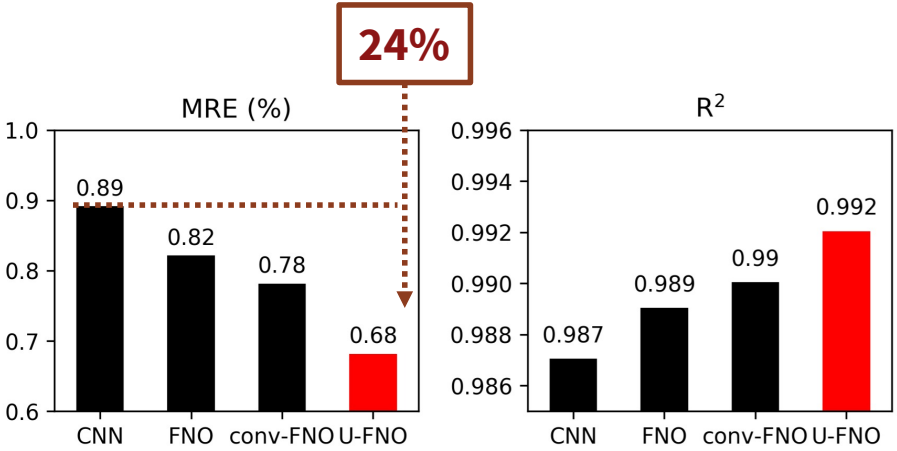

B. Pressure buildup

Remark: U-FNO is as much as 3.4 times more data efficient than CNN

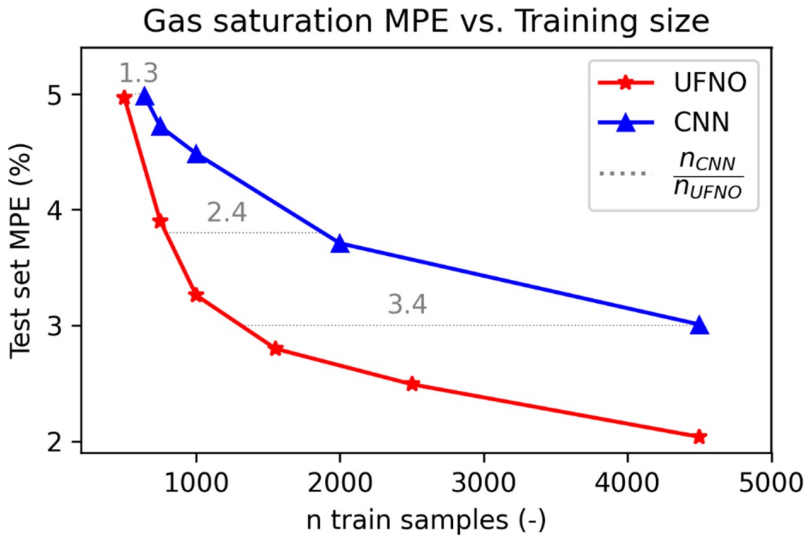

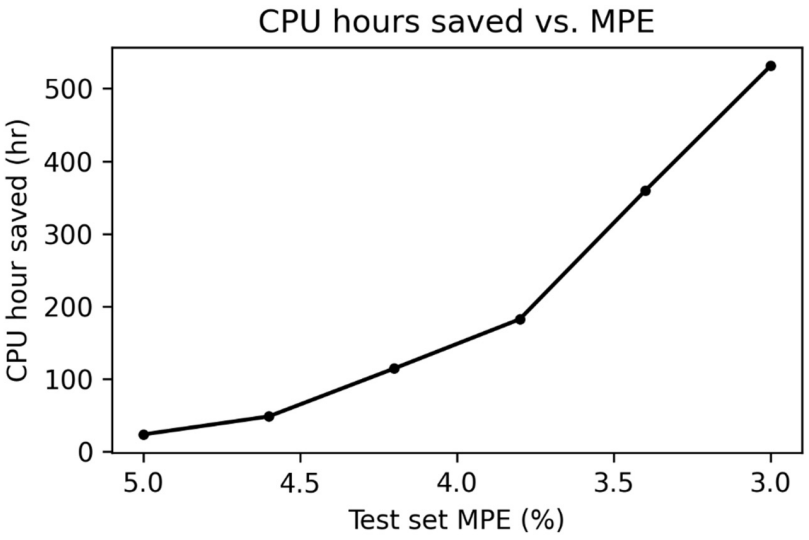

Lower the test error we want to achieve, more CPU hours we can save.

Computational efficiency: prediction speed up is 60000x vs. numerical simulation; even faster than CNN

	# Parameter (-)	Training (s/epoch)	Testing		
			Gas saturation (s)	Pressure buildup (s)	Speed-up vs. numerical simulation (times)
CNN	33,316,481	562	0.050	0.050	1×10^4
FNO	31,117,541	711	0.005	0.005	1×10^5
Conv-FNO	31,222,625	1,135	0.006	0.006	1×10^5
U-FNO	33,097,829	1,872	0.010	0.010	6×10^4

Thank you for listening!